REVISION RECORD				
REV	ECO	DESCRIPTION	DRFT	CHKD

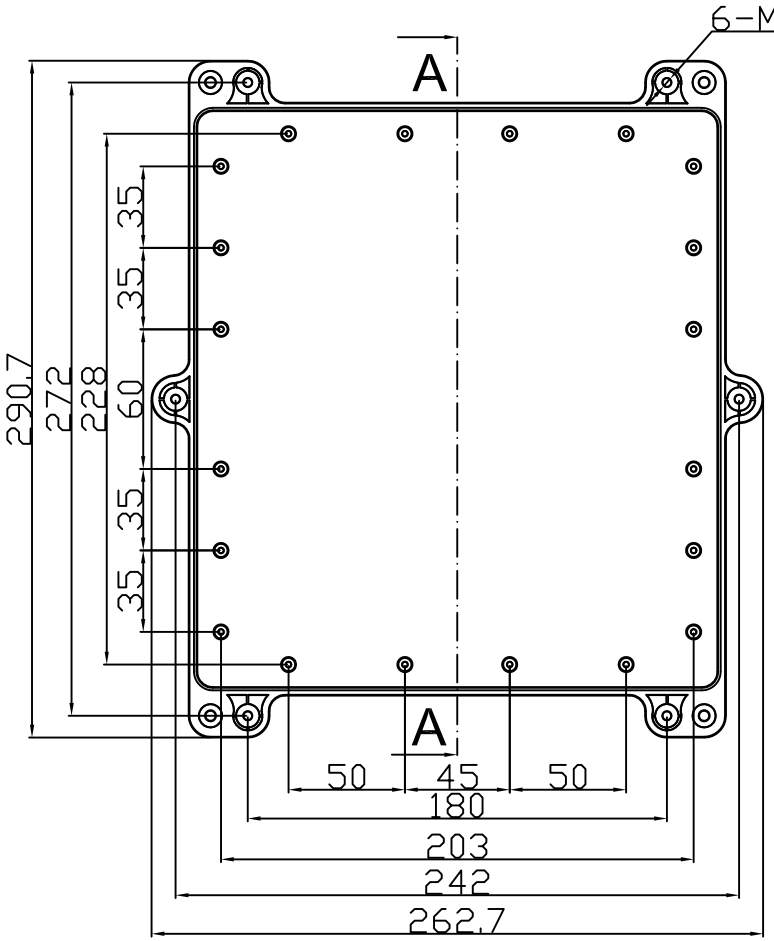

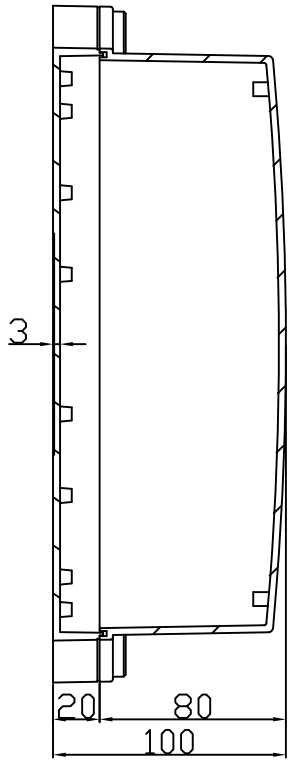

A-A

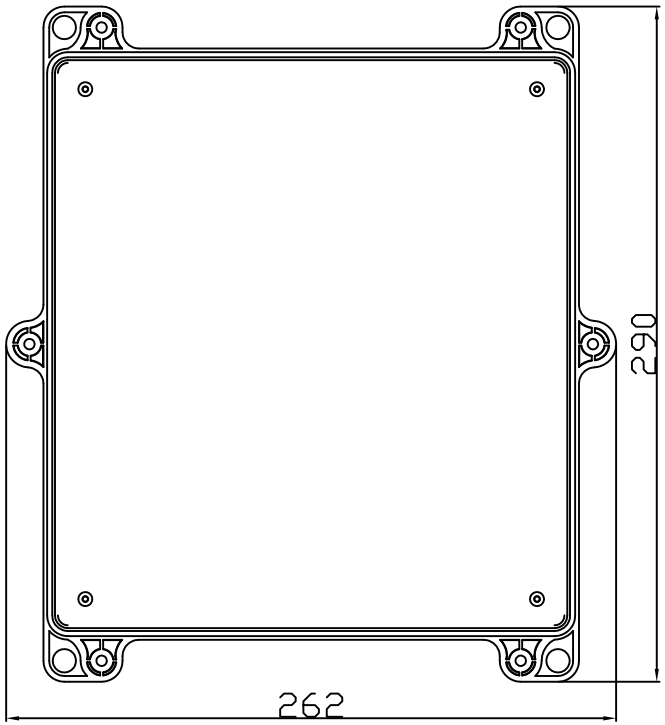

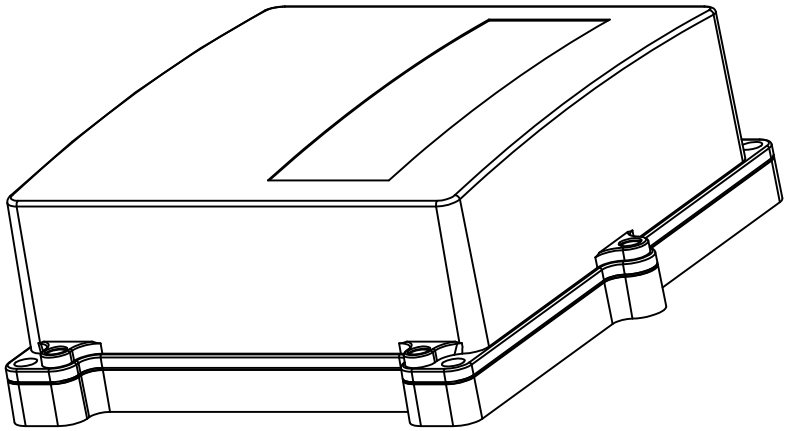

MM (INCH)			
TOLERANCES EXCEPT AS NOTED			
MM			
.0 ± 0.3	±		
.00 ± 0.2	±		
.000 ± 0.1	±		
ANGLES ± 5°			
FIRST ANGLE PROJECTION			

DETACHED LISTS

	NAME	DATE
DRAWN	Kelvin	02/25/2015
CHECKED		
ENG APPR.		

MATERIAL : ABS

QT'Y :

FINISH:

SCALE : 1:1

E:\new logo.jpg

EVEREST

WWW.EVEREST CASE.COM

TITLE

PW044

DRAWING NO. PW045

/PART NO. 00

SIZE A4

REV

DO NOT SCALE DRAWING

SHEET 1 OF 1